PROFILE 60 TRIMLESS 20MM X 60MM





Model	LED by C-light Brand	LED Color	Profile Color	Dimming
• SKU 7302	• 60W 24V 5100Lum 720L/M	• Warm White 2900K/3200K • Natural White 3900K/4100K	• Aluminum ○ White • Black • Ral	• Triac • 0-10 Push • 1-10 • Dali

PROFILE 60 RECESSED 20MM X 60MM



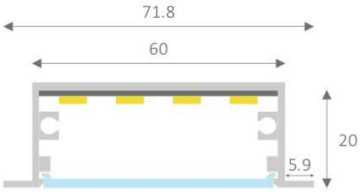

Model	LED by C-light Brand	LED Color	Profile Color	Dimming
• SKU 7311	• 60W 24V 5100Lum 720L/M	• Warm White 2900K/3200K • Natural White 3900K/4100K	• Aluminum ○ White • Black • Ral	• Triac • 0-10 Push • 1-10 • Dali

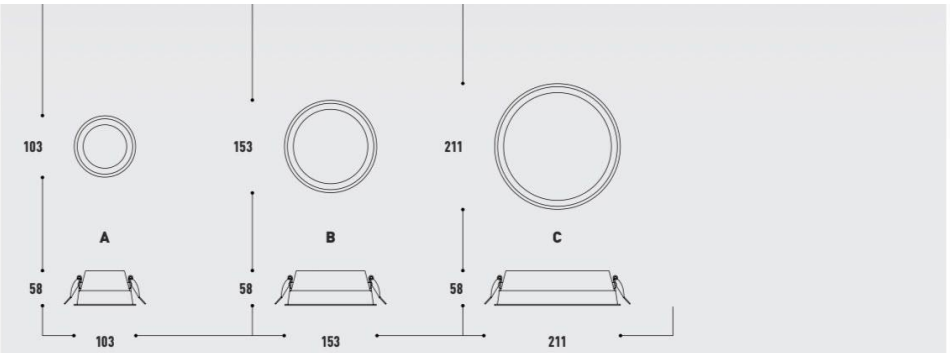

LED	lm	K	W	INPUT mA	OPTIC	CUT OUT mm	Type	Colour	Item no.
SMD	940	3000	10	300	90°	98	**A**	White	15004
								Black	150044
SMD	1400	3000	16	300	100°	148	**B**	White	15005
								Black	150055
SMD	1870	3000	24	300	100°	206	**C**	White	15006
								Black	150066

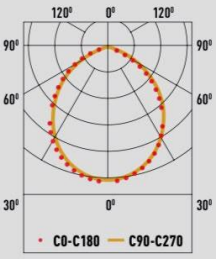

DIAM	LUX	DIST	
2.0 m	349 lx		A
2.3 m	582 lx		B
2.4 m	819 lx	1 m	C
4.1 m	87 lx		
4.7 m	145 lx		
4.9 m	205 lx	2 m	
6.1 m	39 lx		
7.0 m	65 lx		
7.3 m	91 lx	3 m	
8.1 m	22 lx		
9.4 m	37 lx		
9.8 m	51 lx	4 m	

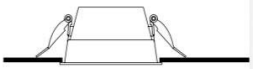



CARTON	Size (L*W*H) cm	PCS	CBM	kg
A	63.5*28*35	60	0.062	14.4
B	64*38*34	40	0.082	18.8
C	50*38.5*46	24	0.088	15